MOEN

Specifications

DESCRIPTION

- Metal construction with anodizing finish

STANDARD

- Comply with QB1560-2006
- Anodizing finish pass AASS 24H grade 10.

WARRANTY

- 5 years limited warranty except artificial damage and chemicals erosion

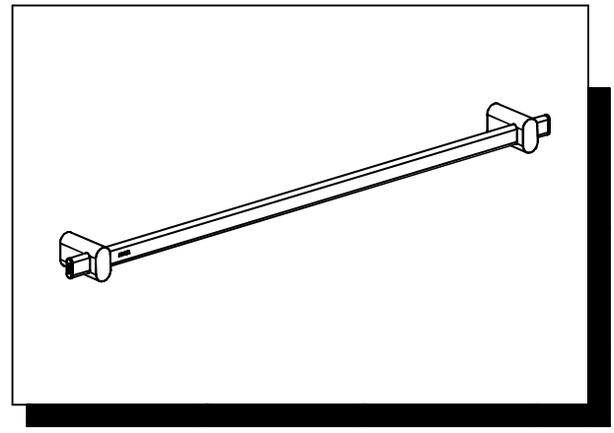

NOTE:ALL DIMENSIONS ARE MM.

Bath Accessories:Single Towel Bar
Models:ACC2403

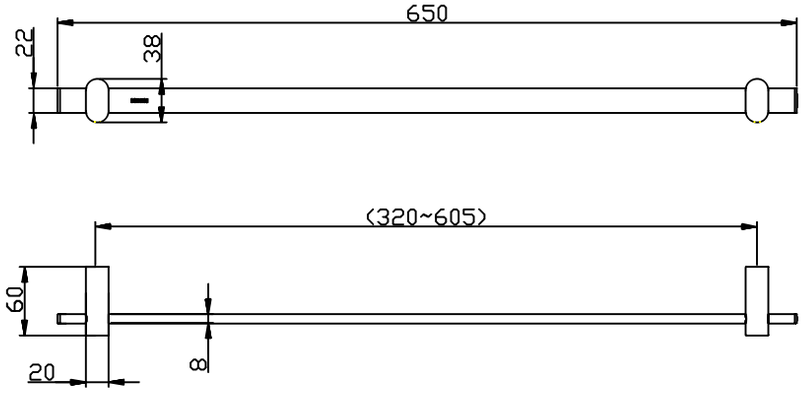

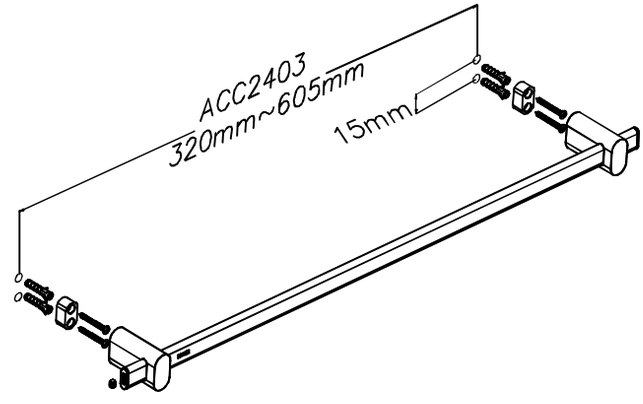

REV:07/17