INS11048E - 4/01

MOEN® 摩恩®

嵌入式浴缸

安装说明书

Drop-in Bathtub

INSTALLATION INSTRUCTIONS

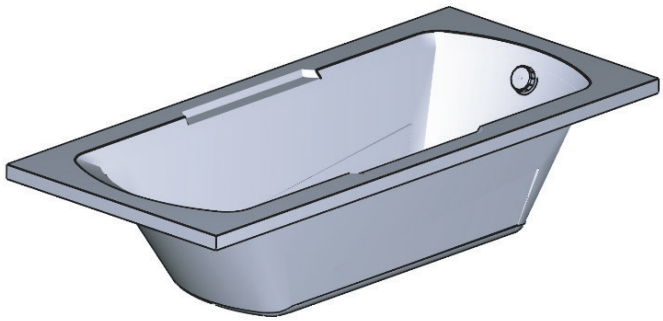

如需安装支持，配件丢失或替换等，请联系本公司。
对于中国大陆以外的市场，请咨询当地经销商。
(中国大陆) 400-630-8866
(中国大陆) www.moen.cn
(中国大陆以外) www.moen.com.hk

For installation support, missing or replacing parts, etc., please contact the company.
For consumers in markets outside the Chinese mainland, please consult the local dealer.
(Chinese Mainland) 400-630-8866
(Chinese Mainland) www.moen.cn
(Outside Chinese Mainland) www.moen.com.hk

推荐工具
为了安全和让安装和替换变得容易，本公司建议您使用以下工具：

HELPFUL TOOLS
For safety and ease of installation and replacement, the company recommends the use of the following tools:

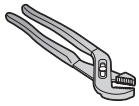

可调钳
Adjustable Pliers

螺纹密封带
Thread Seal Tape

卷尺
Tape Measure

水平仪
Level

硅胶
Silicon

图片仅供参考
（款式因型号而异）

Image is for reference only
(Style varies by model)

记录购买的型号：
（保存安装说明书以备将来参考）

Record Purchased Model Number:
(Save instruction sheet for future reference)

05/09/2025 INS11048E 5000086963
Released 00

产品描述 Product Description

材料：亚克力
Material: Acrylic

颜色：白色
Colors Available: White

尺寸/Size：

SWT091Q: 1700 x 750 x 400mm
SWT092Q: 1500 x 750 x 470mm
*SWT091QF1: 1700 x 750 x 400mm
*SWT091QF2: 1700 x 750 x 400mm
*SWT091QF3: 1700 x 750 x 400mm
*SWT091QF4: 1700 x 750 x 400mm
*SWT092QF1: 1500 x 750 x 470mm
*SWT092QF2: 1500 x 750 x 470mm

SWT095Q: 1400 x 750 x 500mm
SWT096Q: 1200 x 700 x 500mm
SWT097Q: 1600 x 750 x 440mm
*SWT097QF1: 1600 x 750 x 440mm
* SWT097QF2: 1600 x 750 x 440mm

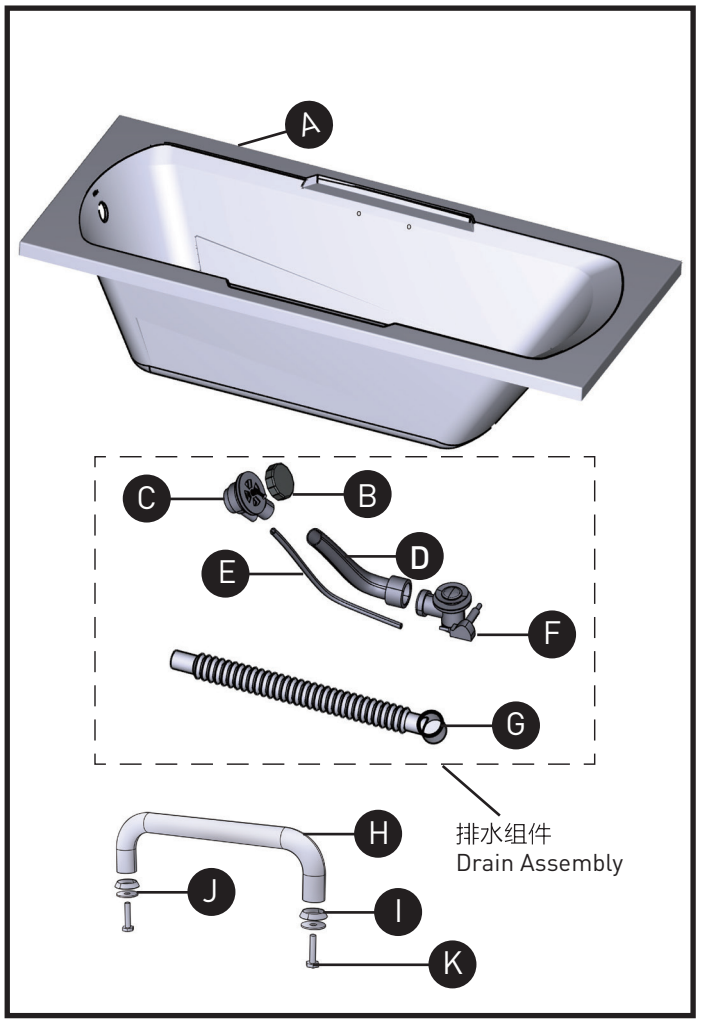

配件清单

A. 浴缸
B. 排水开关
C. 溢流组件
D. 排水管
E. 开关线套管
F. 排水阀
G. 排水软管
* H. 扶手
* I. 底座
* J. 垫片
* K. 螺杆

Parts List

A. Bath
B. Overflow Switch
C. Overflow Assembly
D. Drain Pipe
E. Overflow Sleeve
F. Drain Valve
G. Drain Hose
* H. Handrail
* I . Base
* J. Shim
* K. Screw

*这些型号带扶手
***These models include handrails**

产品尺寸 Rough-in Dimension

- SWT091Q / SWT091QF1 / SWT091QF2 / SWT091QF3 / SWT091QF4: 1700 x 750 x 400mm

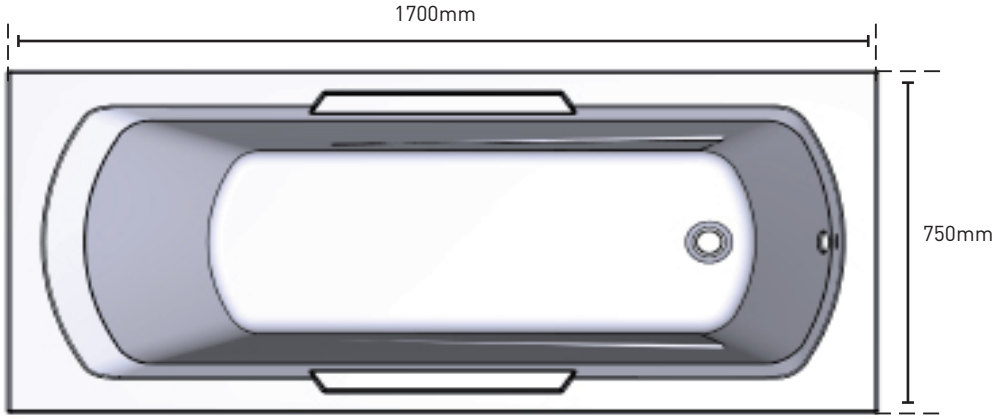

- SWT092Q / SWT092QF1 / SWT092QF2: 1500 x 750 x 470mm

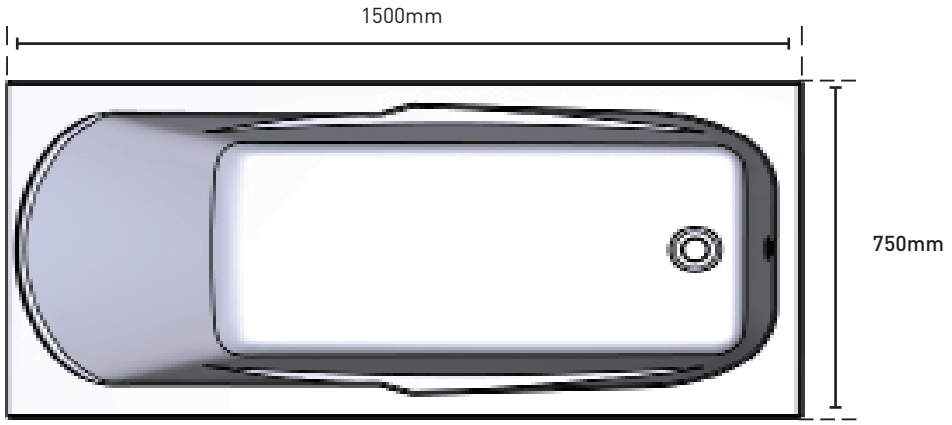

产品尺寸 Rough-in Dimension

- SWT095Q : 1400 x 750 x 500mm

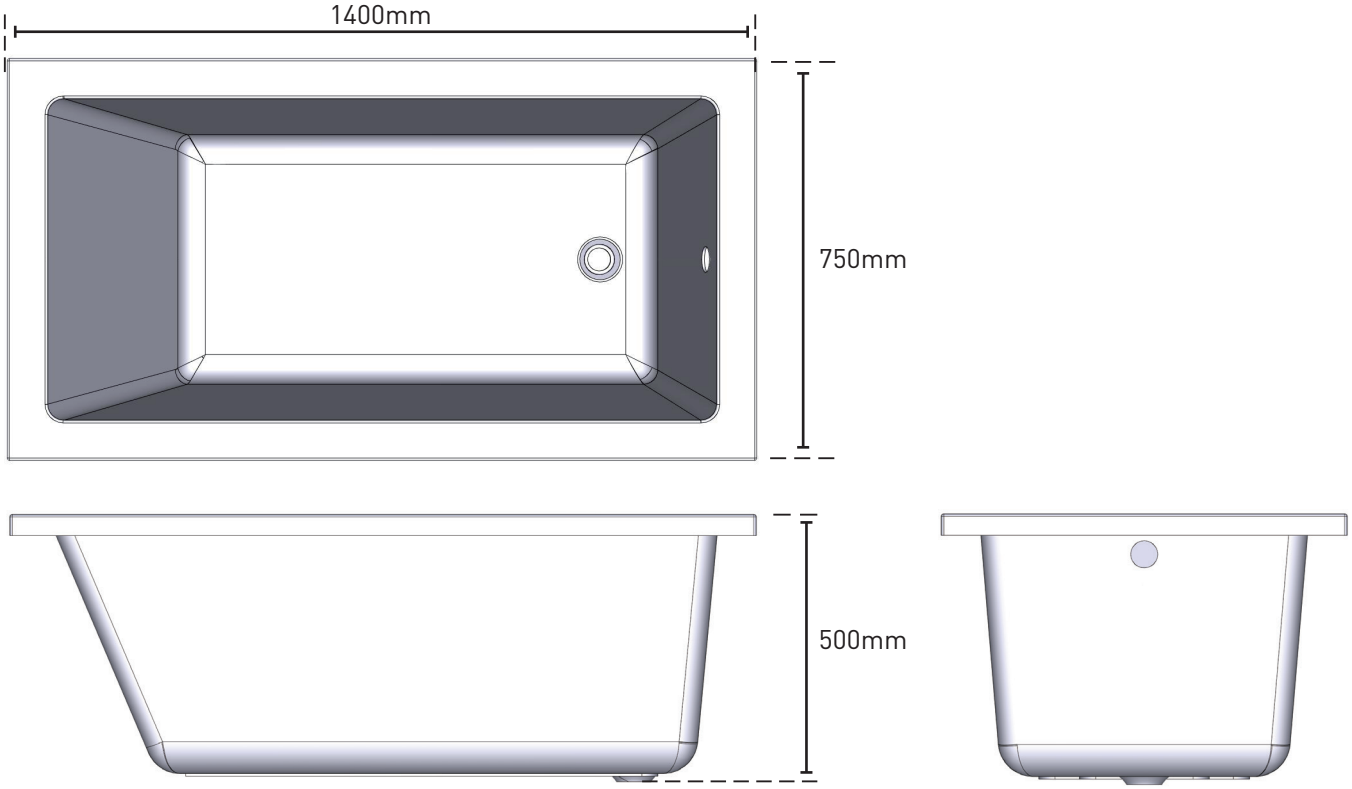

- SWT096Q : 1200 x 700 x 500mm

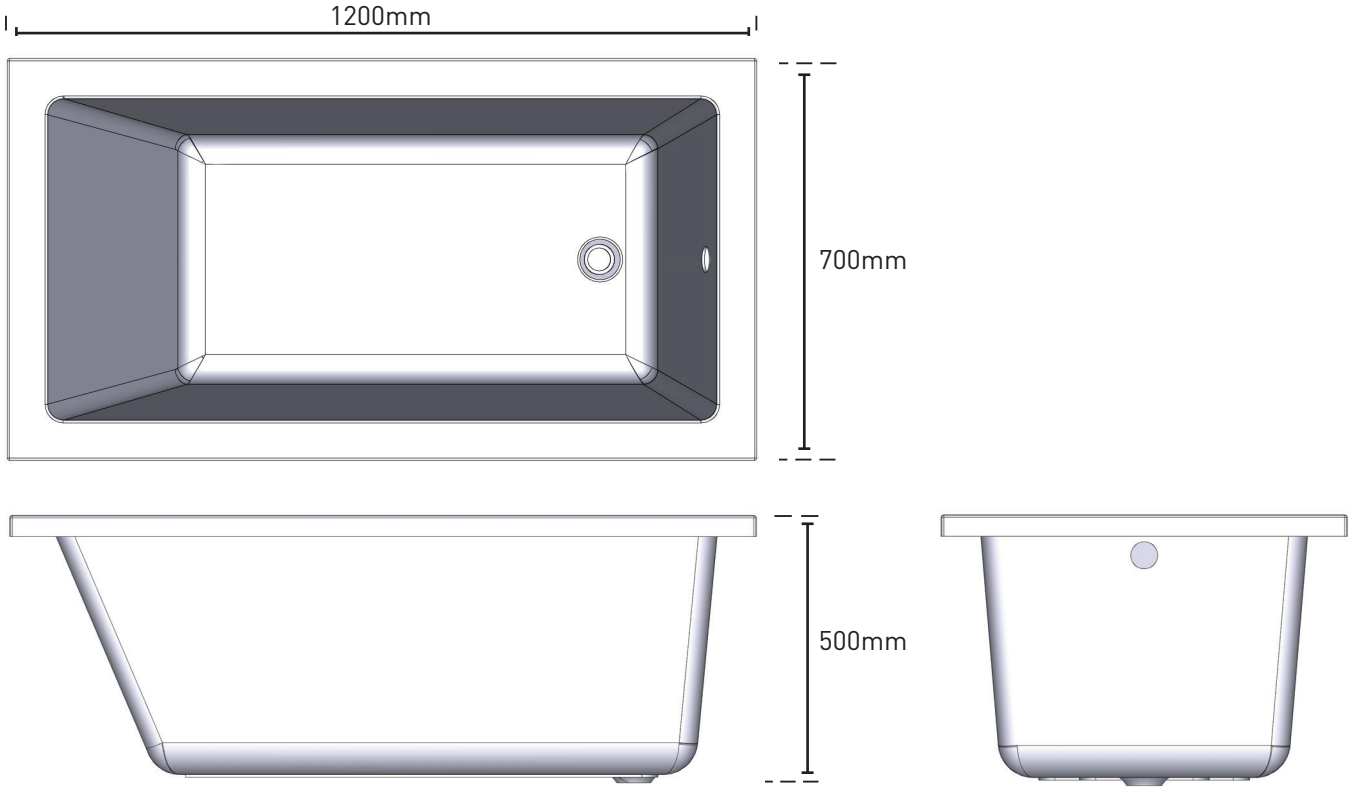

产品尺寸 Rough-in Dimension

- SWT097Q / SWT097QF1 / SWT097QF2 : 1600 x 750 x 440mm

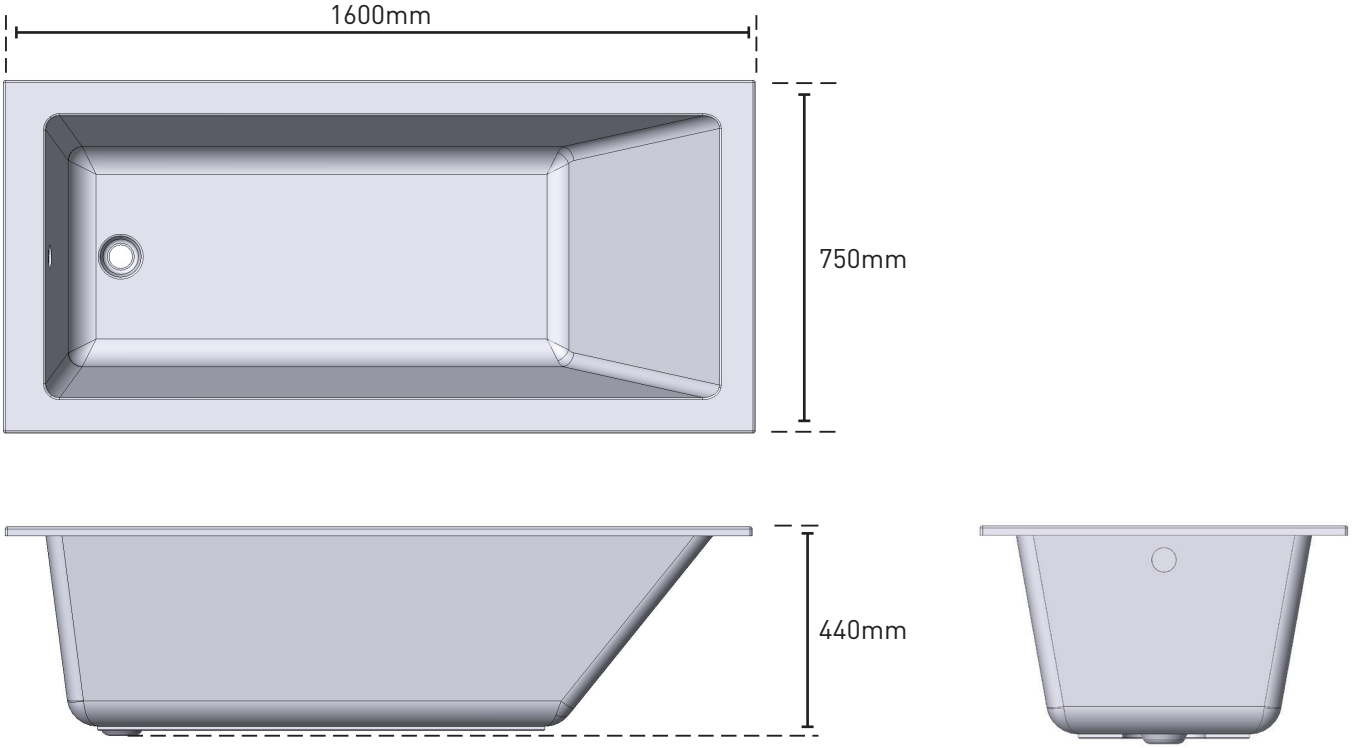

重要信息

1. 为了保证产品质量，请您于安装前仔细检查产品的质量。如在安装后再提出与以下内容有关的质量问题，这将不包括在我们的责任范围内。
2. 安装前，请仔细阅读本手册，并正确施工。
3. 请按本说明书内记载的方法施工。擅自变更施工方法所引起的不良后果，本公司将不负责所引起之损失。
4. 需请专业人员施工。
5. 在正式安装之前，请检查以下情况: a) 浴缸是否因运输不当有漏水现象； b)浴缸表面是否有任何撞击或破损现象。

施工前重要事项

1. 为了方便维修和清洁，建议将浴缸安装在瓷砖已经贴好的台面和地砖已经贴好的地板上。
2. 为便于安装和检修浴缸的排水系统，请不要将浴缸用水泥及瓷砖将其封死。
3. 施工过程中，请不要将浴缸表面的保护膜撕开。
4. 将墙，地砖的工程完全结束后，再将浴缸从包装箱中取出进行安装。
5. 施工时，严禁将灯泡、明火置于浴缸内。
6. 施工时，严禁在浴缸内存放黄沙、水泥及其它容易损坏缸体表面的杂物。
7. 施工时，严禁向浴缸内倾倒油漆，胶水等溶剂。
8. 确保：
   – 浴缸底部的地板必须足以支撑1000公斤以上的质量；
   – 热水供应应达到浴缸最大容量的70%或以上；
   – 请仔细了解安装尺寸图上的浴缸尺寸及水泵的位置，确定安装尺寸正确；
   – 请确保安装浴缸地板的水平。

Important Information

1. In order to avoid quality dispute, please kindly check product before installation. Or innoci should not be liable for any quality issue raised after installation.
2. Please read the instruction carefully before begining to install.
3. Please follow steps in the instruction to install this product or may result in costly mistake. Innoci shall not be responsible for any loss from that mistake.
4. Professional help is required for installation of this product.
5. Before starting installation, check and ensure: a) Bathtub are free of leaks that may occur during delivery. b) Bathtub surface is free of hit and damage.

Installation Consideration

1. To facilitate maintenance and clean, we recommend to install bathtub on finished floor with ceramic tile or terrace with ground tile.
2. To facilitate install and maintenance bathtub's key parts like drainage system. Don't wall up bathtub with cement or tiles.
3. Don't remove bathtub protecting film during installation.
4. Don't take bathtub out of package for installation until wall and floor preparation finshed.
5. No bulbs and open fires are allowed to place in bathtub during installation.
6. No stuff like sand, cement or other sundries are allowed to place in bathtub as that would likely damage bathtub surface.
7. No solvent like paint or glue are allowed to contact with bathtub.
8. Ensure:

- The floor under the botton of bathtub must be able to support the weight of 1000 kg or above.
- The hot water supply shall reach to 70% of the maximum volume of the bathtub or above.
- Carefully refer to the bathtub size and actual position of the wate pump in the installation dimension diagram to ensure the accurate installation dimensions.
- Make sure that the floor for installing the bathtub is at a level.

05/09/2025 13:57:10 ACS 104.85 5000069633 Bathtub

安装前准备工作

1. 准备底层地板
检查浴缸下方的地面，请确保底层地面水平，对底层地面做防水处理。

砌好专门安放浴缸的基座，具体建议如下：

– 基座高度视采用的排水和所砌平台高度而定。

– 每块基座高度，SWT091Q / SWT091QF1 / SWT091QF2 / SWT091QF3 / SWT091QF4 / SWT097Q / SWT097QF1 / SWT097QF2 建议相差大约10mm

SWT092Q / SWT092QF1 / SWT092QF2 / SWT095Q / SWT096Q 建议相差大约7mm

– 基座之间的间隔按缸底长度等比例放置。

注：下图标注的基座尺寸仅供参考。

Before Installation

1. Subfloor Preparation
Check the flooring under the bath. Make sure the subfloor is level. It is strongly recommended to prepare waterproof layer for the subfloor!
It is strongly recommended to:

- Construct bath base whose height shall depend on the chosen drain.
- The height difference between each base for SWT091Q / SWT091QF1 / SWT091QF2 / SWT091QF3 / SWT091QF4 / SWT097Q / SWT097QF1 / SWT097QF2 is about 10 mm.
  SWT092Q / SWT092QF1 / SWT092QF2 / SWT095Q / SWT096Q is about 7mm.
- The space between each base is same and depends on the length of the bottom of bathtub.

Note: The dimensions in the following figures are for reference.

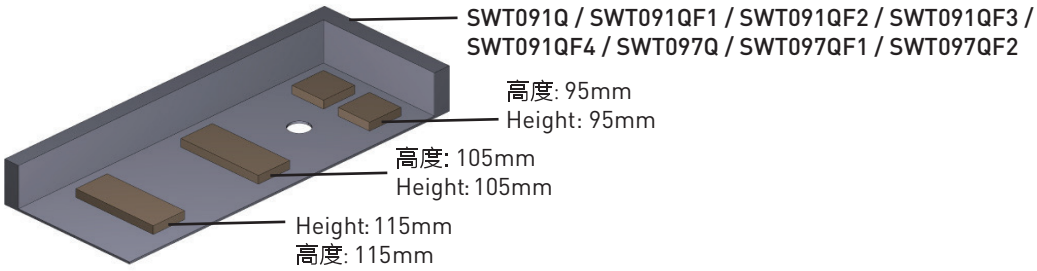

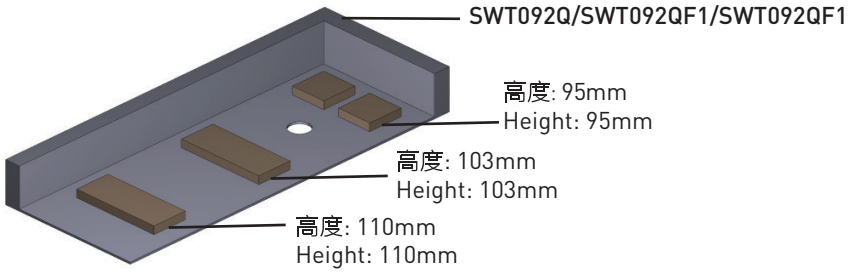

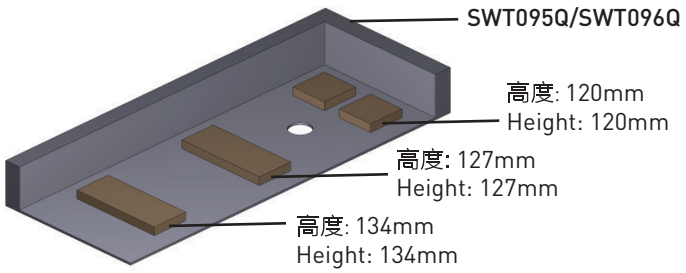

2. 准备浴缸支撑

下图所示为几种常用的支撑结构，请采用适合您的浴缸型号的结构。对不同的支撑结构方式，也许有必要进行适度调整。

注：下图标注的砌墙尺寸仅供参考。

2. Bath Area Construction Preparation

Possible framing arrangements are illustrated below. Use the framing construction appropriate for your particular bath model. Some modifications may be needed for other types of construction, if prefered.

Note:The dimensions in the following figures are for reference.

SWT091Q / SWT091QF1 / SWT091QF2 / SWT091QF3 / SWT091QF4

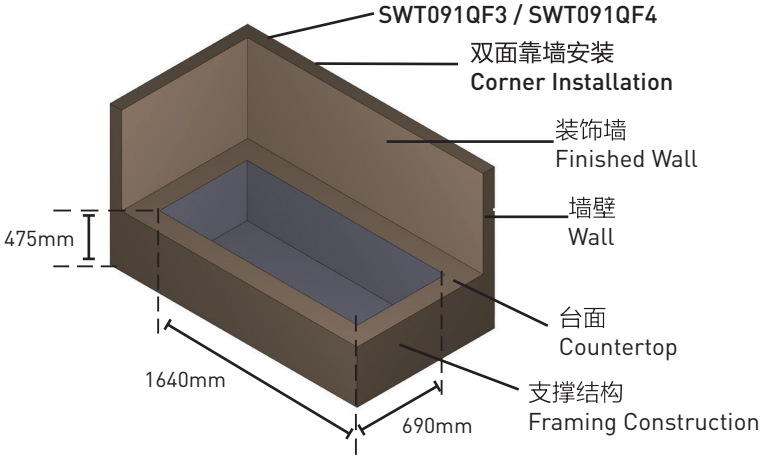

SWT092Q / SWT092QF1 / SWT092QF2

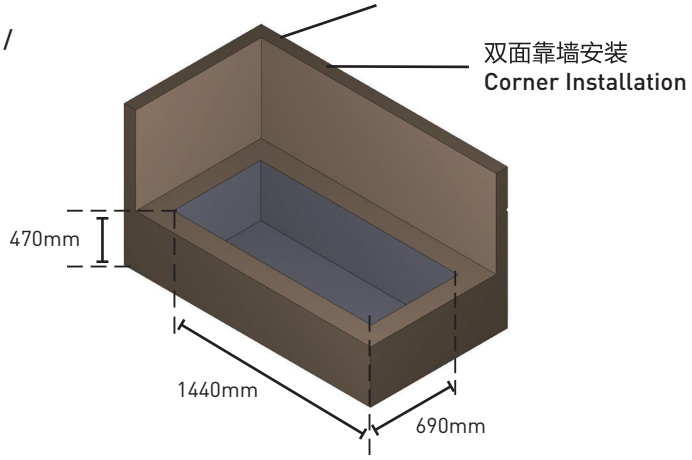

SWT096Q

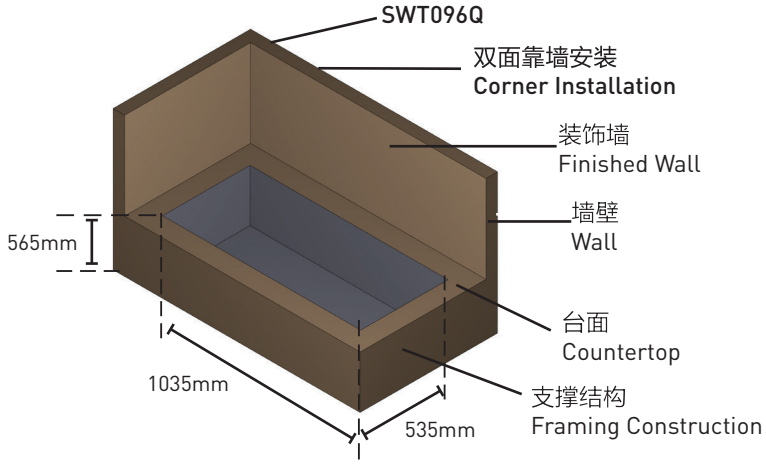

SWT095Q

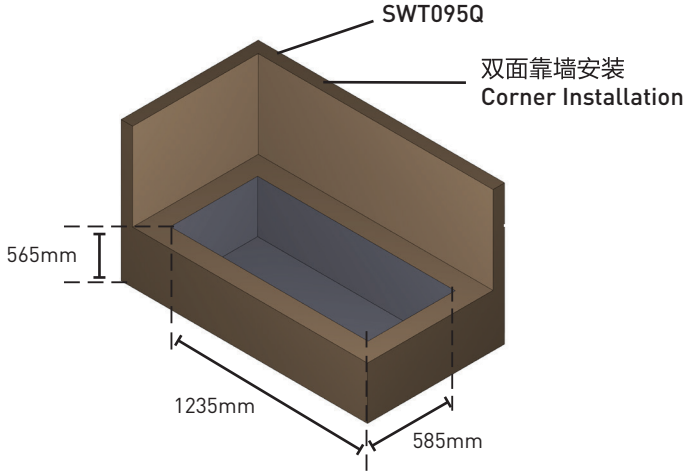

SWT097Q / SWT097QF1 / SWT097QF2

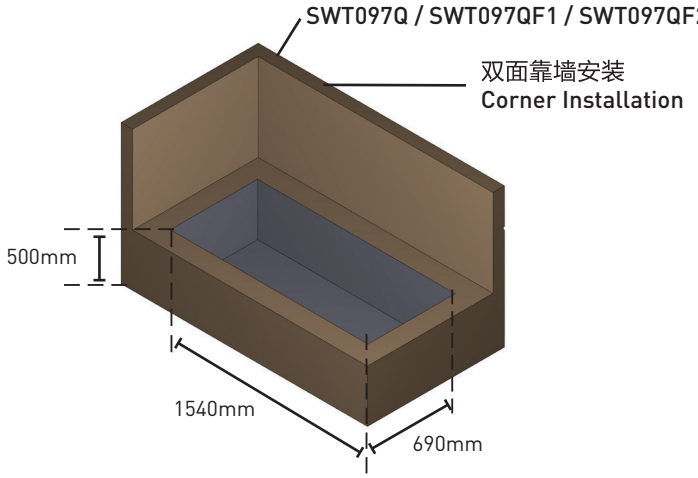

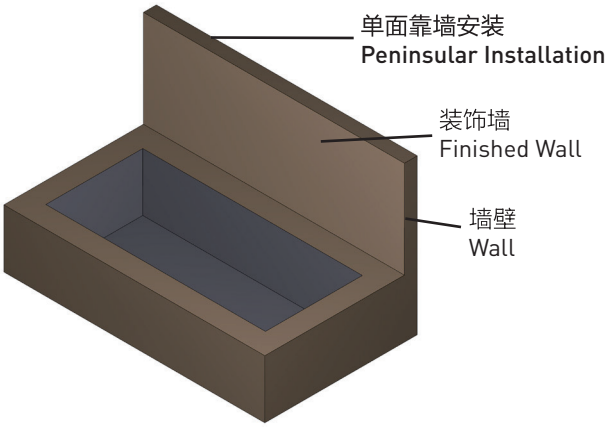

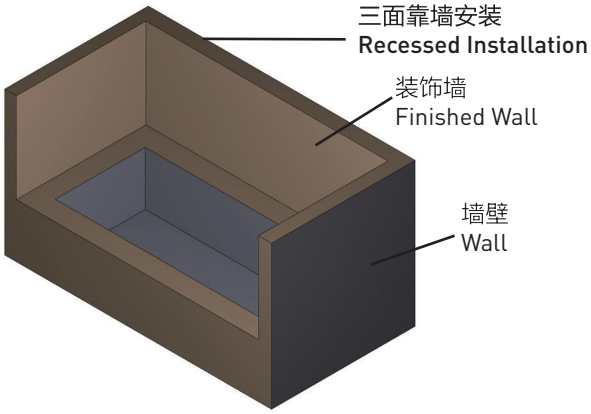

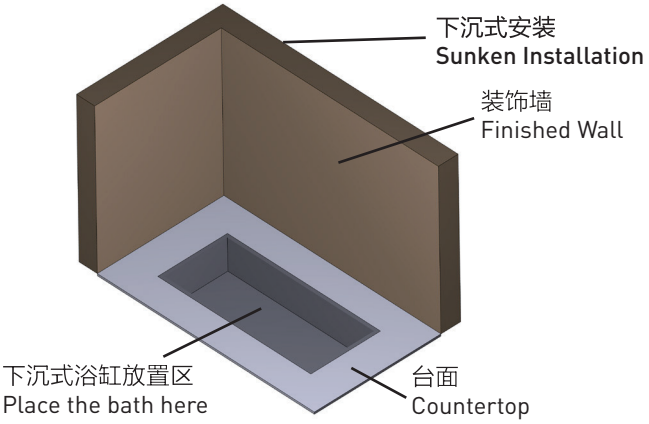

注：单面靠墙、三面靠墙和下沉式安装的砌墙尺寸请参考上述的双面靠墙安装。

Note: For the dimensions of the construction area for Peninsular Installation, Recessed Installation, and Sunken Installation, you can refer to the Corner Installation above.

3. 台面的准备
根据浴缸的外形准备台面。如果有切割图，请按切割图要求制备台面，这将提供您安装所需的切割尺寸。

3. Subfloor Preparation
Prepare the countertop as per bath outline. Prepare the countertop as per the cut-out template, which defines the required dimensions.

4. 管道的准备
将进水管道和排水管道按安装尺寸排布，检查供水管是否漏水。

4. Plumbing Preparation
Position inlet supplies and outlet supplies according to rough-in dimensions. Cap the supplies and check for leaks.

5. 其它准备
安装前，必须去除排水口、溢水口及挡水边四周的防护膜，以便进行防水密封处理。
在浴缸表面盖上保护套或类似的材料，小心不要划伤浴缸表面。

5. Other Preparation
The protective film must be removed from around the waste outlet, orerflow and water fender prior to installation in order to make a watertight seal at these points possible.
Position a protective covering or similar material in the bottom of the unit. Be careful not to scratch the bath surface.

安装浴缸 Install the Bath

1

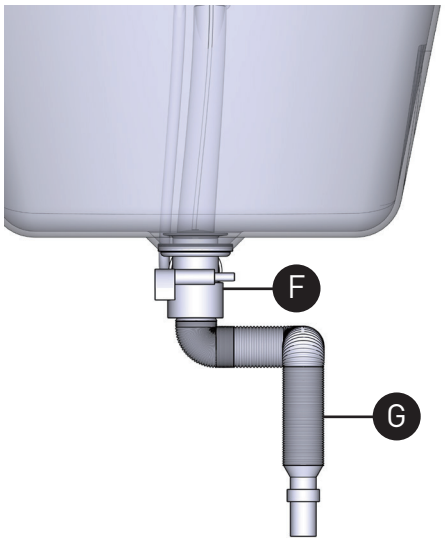

按照浴缸排水阀的安装说明书将排水阀（F）安装在浴缸上。上图是Moen 浴缸排水阀（F）和排水软管（G）的安装图例供参考。

Install the Drain Valve (F) to the bathtub according to the corresponding installation instructions. The figure below shows the installation of Moen bath Drain Valve (F) and Drain Hose (G) for reference.

2

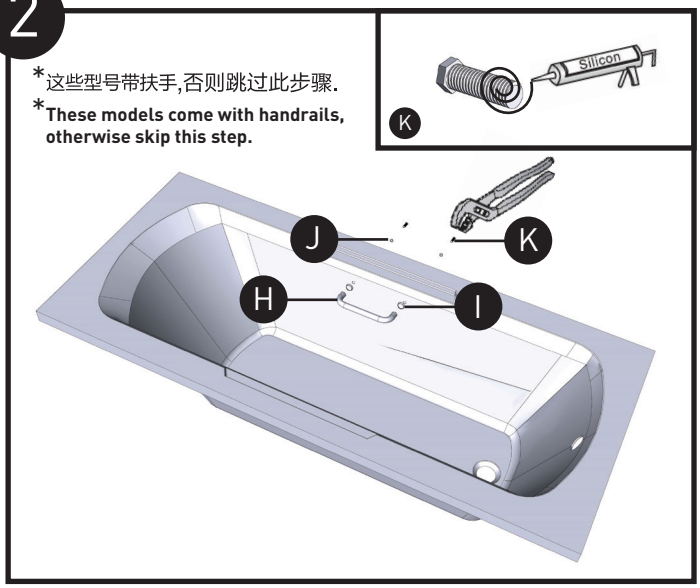

首先在螺杆（**K**）上，打满硅胶；将扶手（**H**）放在底座（**I**）上，把螺杆（**K**）加上垫片（**J**）安装在扶手孔位上，用扳手以4.5–5.5Nm力锁紧螺杆（**K**），最后擦拭多余的硅胶。

First, cover the screw (K) with silicone. Place the handrail (H) on the base (I). Install the screw (K) and gasket (J) on the handrail hole and lock it with a wrench and a force of 4.5-5Nm. Wipe the excess silicone.

3

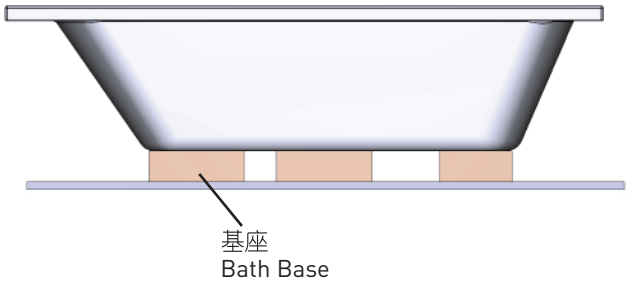

靠墙安装或采用岛式安装方式安装浴缸。岛式安装都有材料围绕。在两种安装方式中都需要确保台面由砖块或水泥构件支撑。建造浴缸底部支撑结构，需保证浴缸放置后平稳、水平。

Install the bathtub with its four sides leaning on the wall or without leaning on the wall (like an island). The second installation method makes the bathtub surrounded by materials.

Note: Both installation methods need to make sure that the deck is suppported by bricks or concrete. Build bathtub bottom support structure to guarantee bathtub is stable and level.

4

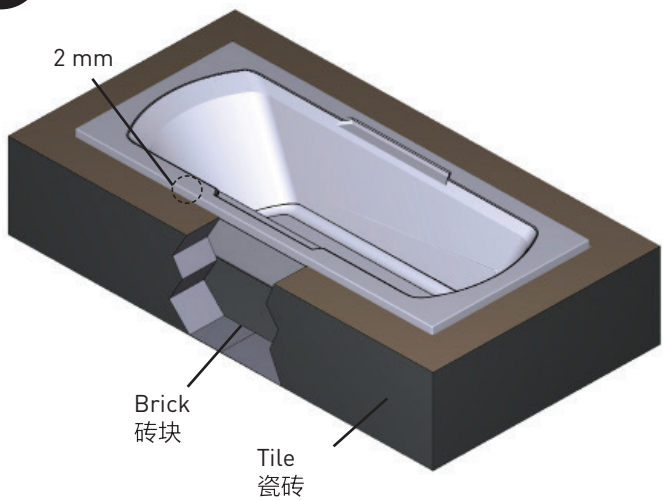

浴缸边缘和框架之间需留出2 mm的间隙。不要靠浴缸边缘将浴缸悬挂。

There should be 2 mm gap between the bathtub edge and the frame. Don't hang the bathtub edge on the countertop.

5

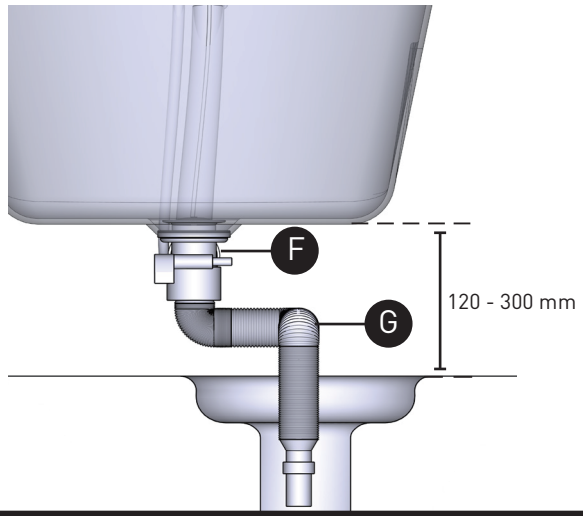

安装排水软管（G）。将浴缸放到安装位置，适当倾斜缸体把底部排水软管插入预留好的下水孔内。下水孔应离浴缸排水阀（F）120 – 300 mm。因排水管为波纹管，过度弯曲会增加后期长期使用的污垢堆积。

注意：避免损坏浴缸底部和地面，浴缸的所有排水接口都要确保做好防渗处理。

1. 安装水龙头及配件。打开冷水及热水阀门，检查所有给水管接头是否有渗漏。注意：为了方便以后维修，一定要安装一个检修门。
2. 让水流入浴缸然后放水，检查排水配件接头是否有渗漏。
3. 当浴缸固定到位后，将排水软管（G）与存水弯相接。

Install the Drain Hose (G). Put the bathtub on the installation location. Tilt the bathtub properly and Drain Hose at the bottom should be inserted into preformed drain hole which should be 120 - 300 mm away from Drainage Valve (F).

Note: Avoid damage to the bath bottom and floor as much as possible. Make waterproof treatment to all outlet connections!

1. Install the faucet and fittings.Open the hot and coldwater valves, and check the supply connections for leaks. Note: An access panel will simplify futuremaintenance.
2. Fill water into the bath and let it discharged to check the drain connections for leaks.
3. When the bath is securely positioned, connect the Drain Hose (G) to the trap.

6

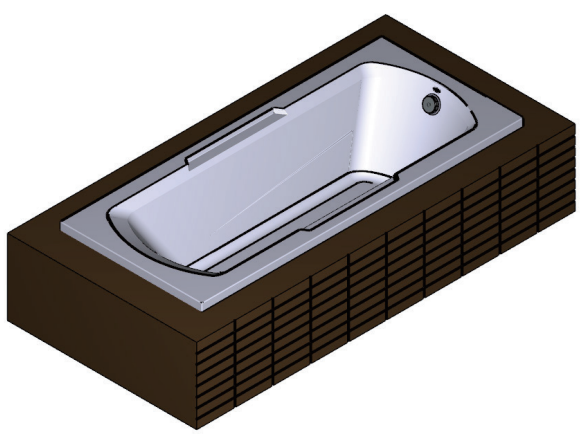

完成墙壁贴面（如瓷砖或大理石贴面）。

Complete decoration, such as sticking the tile or marble into place.

05/08/2025 INS110A5E 5000086963
Released 00

7

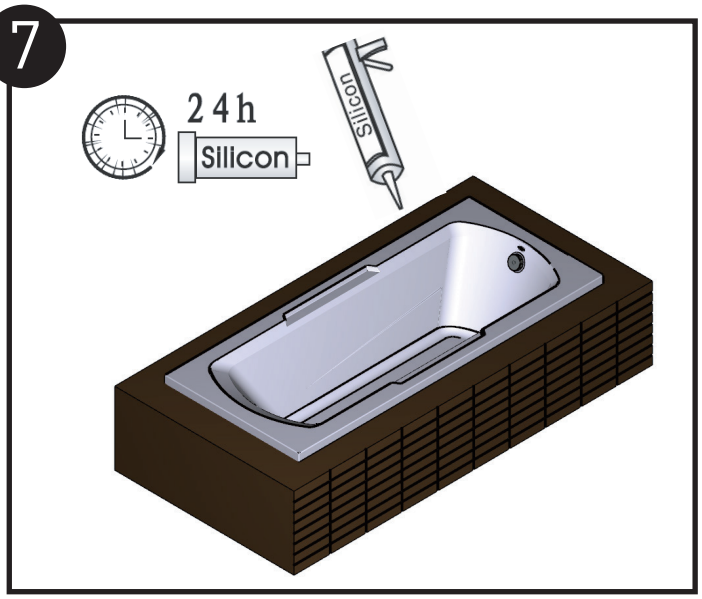

完工清理：

1. 安装完成后，小心去除产品保护膜；
2. 清理浴缸表面时，请勿使用磨损性的清洁用具，可以使用温水和非腐蚀性的液体清洁剂。
3. 难以清除的污迹、油漆或柏油，可用酒精擦净，请不要使用含有溶剂的清洁剂。滞留水泥可用薄木刀刮掉。请不要使用金属刮刀，钢丝刷或其它金属工具。对残留的水泥浆，可用湿布粘些洗衣粉，以提供轻微的研磨作用。
4. 浴缸边缘与完工墙面/台面之间的接缝用密封硅胶填满。建议：使用常温下硬化的密封胶。

Cleaning after complete installation:

1. Remove the protective film from the product with caution;
2. Do not use abrasive cleaning tools to clean. Use warm water and liquid, non-abrasive detergent to clean the surface.
3. Stubborn stains, paint, or tar can be removed with mineral spirits. Do not use cleaners containing solvent. Plaster can be removed by scraping with wood edge. Do not use metal scrapers, wire brushes, or other metal tools. Use powder detergents on a damp cloth to provide mild abrasive action to the residual plaster.
4. The gap between the edge of bathtub and the finished wall surface/deck shall be filled in with silicone sealant. Note: It is strongly recommended to use sealant that has been hardened under room temperature.

安装后检查

检查项目	是/否
1. 缸体有没有损坏?	
2. 排水管是否通畅?	
3. 进水源是否安装好?	
4. 浴缸底部支撑是否牢固?	

Check after Installation

Check List	Yes/No
1. The tub has no damage?	
2. The drainage pipeline is clear?	
3. The water supply is well connected?	
4. The support at the bottom of the bathtub is stable enough?	

维护与保养

1. 为使浴缸干净整洁，建议您在沐浴后，趁水刚放完而浴缸还没干的时候立即清洁浴缸，这时候容易将肥皂、油脂及污垢等清除。
2. 在水质较硬的地区，由于水中钙的含量高，污垢粘在浴缸壁上会留下黄色的斑痕，所以请您经常清洁浴缸。
3. 清洁时，使用柔软的布配以中性清洁剂或肥皂水清洗，然后将水分擦干。
4. 严禁使用坚硬的物品或具有研磨作用的物品如去污粉等，清洁浴缸及护罩表面，因其可能腐蚀、划伤浴缸表面，从而降低表面光泽。
5. 亚克力浴缸可以抵御绝大多数常用化学品的侵蚀，但仍应避免与油漆，油漆清除剂如氯仿和丙酮等强有机溶剂接触，以免引起表面软化，溶化或龟裂。
6. 严禁将燃着的烟头放在浴缸表面上，否则将留下燃烧的疤痕。
7. 严禁将灯泡，明火放置在浴缸内，以免造成表面破损。

以下是对划伤的建议：

如果浴缸表面有轻微的划伤或擦痕，可在划伤处喷上金属抛光剂或汽车抛光剂，用电动抛光机磨抛来重新获得光亮表面。

如果是较深的划伤，可先使用2000#水砂纸擦去划痕，然后用上述的方法来获得光亮表面。

Maintenance

1. Clean the bathtub immediately after drainage is complete, as soap, oil and dirt can be easily removed.
2. Clean bathtub frequently if it is used in hard water area, where calcium in water would leave yellow spots on bathtub surface.
3. Use soft cloth with neutral cleaner or soap to clean bathtub and wipe dry.
4. Don't use hard or abrasive stuff like cleaning powder to clean bathtub, as that will corrode, scratch and dull bathtub surface.
5. Avoid contact with paint, paint remover like chloroform or any strong organic solvent like acetone, or bathtub surface will be softened, melted or crackle.
6. Don't place flaming cigarette on bath or it will burn bathtub surface.
7. Don't place bulbs and open fires in bathtub lest bathtub surface is damaged.

Suggestion to remove scrach:

- If scratch is slight, spray metal polish or car polish on scratch at first, and then use electric polishing machine to resume glossy surface.
- If scratch is deep, use 2000# abrasive paper to remove scratch at first, and then use same method as above to resume glossy surface.

05/09/2025 INST.10445 50000696653 Rev.00

MOEN® 摩恩®

产品售后保修条款

本产品是在高质量标准及生产工艺下制造的，本公司承诺为消费者购买的产品提供有期限免费保修及终身维修服务。
亚克力浴缸免费保修期为3年，均自消费者购买日（以本产品分销商开具的发票或收据上载明日期为准）起计。
免费保修范围为产品及产品配件（如淋浴杆、软管、花洒、落水、把手、装饰盖、提拉杆、混水器等）由于材质及工艺原因而造成的故障或损坏。免费保修期内，我们将无偿为您提供修理服务及更换发生故障的产品或产品配件。本公司的售后服务责任仅限于对故障产品的修理，而不延及您因产品故障而发生的其他损失，法律另有规定的除外。
您需了解：产品外观碰伤、刻划痕迹，以及滥用及不正当保养所导致的故障或损坏，均不属于免费保修范围。即使在免费保修期内，属下列（1）–（5）情况之一的，需酌情收取修理费用：

1. 不能出示相符的保修卡和有效购买凭证情况的;
2. 未按使用说明书告知的使用方法和注意事项造成的故障;
3. 自行拆卸、维修、改装所造成的故障和损坏;
4. 由于不可抗力等外部原因引起的故障和损坏;
5. 由于运输、搬卸、挤压等造成的损坏。

对于保修期外或不在保修范围内的产品，如需维修，本公司将酌情收取上门费、人工费及材料费。
本保修条款仅对原始消费者和酒店行业的购买者有效，并不适用于本产品在工业、商业、贸易和非酒店行业的使用。
如对本保修条款内容有任何疑问，请拨打400 630 8866 咨询热线，或向当地分销商咨询。对于中国大陆以外的市场，此产品的保修及保障服务详情请咨询当地经销商。
本公司对本产品保修拥有最终解释权。

MOEN® 摩恩®

合 格 证
Compliance Certification

产品名称
Product Name 嵌入式浴缸 Drop-in Bathtub

检验员
Inspector _____

生产日期
Date of Production _____

富俊汇赢科技（上海）有限公司
中国（上海）自由贸易试验区新杨公路
1800弄1号4幢207室
邮编：201413

Fortune Brands Innovations (Shanghai) Co., Ltd
Room 207, Building 4, No. 1, Lane 1800, Xinyang Highway,
China (Shanghai) Pilot Free Trade Zone

PRODUCT LIMITED WARRANTY

We offer limited warranty and lifetime maintenance for the products, which are all manufactured with high standards of workmanship.
The period of warranty shall start from the date of purchase of the product (according to the invoice or receipt issued by the company distributors) and shall cover a period of the following: the warranty period for bathtub is 3 years.
This warranty is your coverage against material and workmanship malfunction or defects in the products or components (such as shower bar, hose, shower, drain assembly, handle, cover, lift rod, aerator etc.). During the warranty period, we offer free maintenance and changing of malfunctioned products or product components. The company's after sales service liability is limited to the maintenance of faulty items and does not cover your other losses caused by product malfunction, except for otherwise stipulated by law.
Cosmetic damages (scratches, dents, etc.) and malfunction or defects caused by abuse or improper maintenance is not covered by this warranty. Although the warranty period remains valid, in case of the following conditions (1) - (5), the maintenance cost (material cost and labor cost) shall still be charged as the case may be:

1. Corresponding warranty card and valid invoice cannot be presented;
2. Faults were caused by the incompliance with the instructions and precautions provided in the user's manual;
3. Damages and faults were caused by self-actuated dismantling, repair and refit;
4. Faults and damages were caused by external factors such as force majeure;
5. Damages were caused by transportation, unloading and extrusion, etc.

This warranty is valid for the original consumers only (including hotel use), and excludes industrial and commercial use of the product (except for hotel use).
This card is only responsible for product maintenance rather than any other liabilities.
In the event that the product requires maintenance but exceeds the warranty period, or that the product is not covered by this warranty, labor cost and material cost shall be charged as the case may be.
Please call 400-630-8866 or contact local dealer for any question. For markets exclude Chinese mainland, the terms and conditions of warranty shall differ between product categories and countries. Please refer to warranty stated by local distribution.
The company Incorporated shall have the final interpretation of the product warranties.

©2025 Fortune Brands Innovations Incorporated

摩恩服务小程序
Moen service applet

05/09/2025 INST/1046S 5000069633
&Zz:bsd:01